SSP-T Series (SSP-T6) Surface Mount Quartz Crystal Units for Low Frequencies

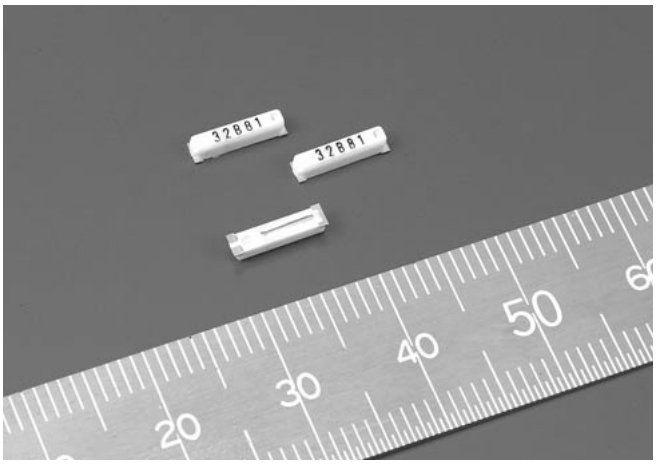

FEATURES

- Ultra thin type with height 1.6mm Max.
- Ultra small mounting area of 16.8mm^2
- SMD type suitable for automatic & high density surface mounting.
- Plastic mold package containing highly reliable tubular type quartz crystal.
- Excellent shock and heat resistance.

APPLICATIONS

- Cellular Phones, Pagers, Radio Communication Equipment, Portable Applications etc.

STANDARD SPECIFICATIONS

Conditions without notice (Temperature: +25°C±2°C)

Item	Symbol	Specifications	Conditions / Notes
Nominal Frequency	fo	32.768kHz/75.000kHz	
Frequency Tolerance	△f/fo	±10ppm, ±20ppm, ±50ppm	Can be used in high accurate products
Turnover Temperature	Tp	+25°C±5°C	
Temperature Coefficient	K	(-3.5±1.0) x 10^{-8}/°C^2	
Load Capacitance	C_L	7.0pF/12.5pF	
Equivalent Series Resistance	R1	55kΩ max.	
Maximum Drive Level	DLmax	1μW	
Recommended Drive Level	DL	0.1μW	
Shunt Capacitance	C_0	0.95pF typ.	
Aging	△f/fo	±3ppm max.	+25°C±3°C, First Year
Operating Temperature Range	Tope	-40°C to +85°C	
Storage Temperature Range	Tsto	-55°C to +125°C	
Reflow Profile	Tsol	230°C max. 20sec. x 2 times	IR Reflow

DIMENSIONS

(For details, please refer to individual specification)

UNIT: mm

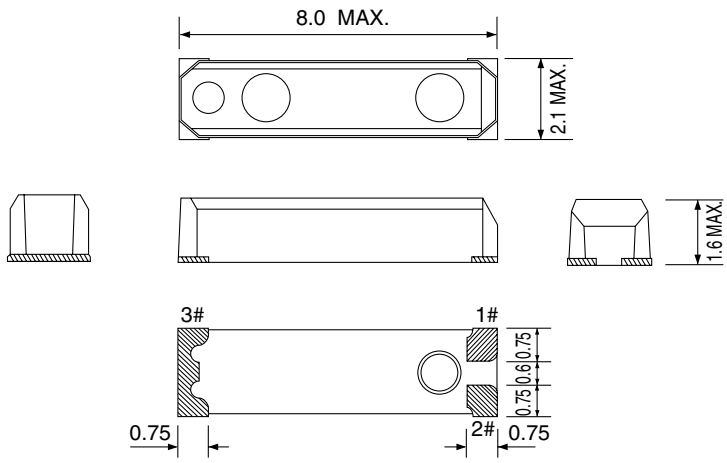

INTERNAL LEAD CONNECTION

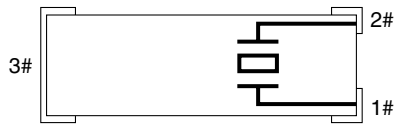

RECOMMENDED SOLDERING PATTERN

UNIT: mm

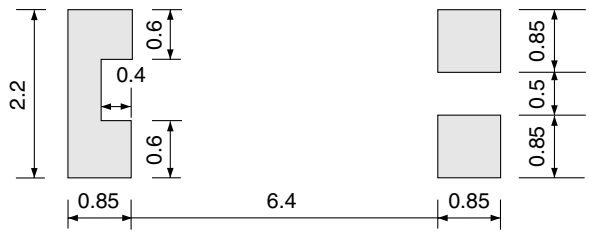

Note: Please make sure that there is no electric wire line under SSP-T6 on the circuit board.